New addition to the HOMAG double-end tenoner family

Truly impressive: Double-end tenoner FPR 260

The HOMAG double-end tenoner portfolio offers customized solutions to individual floor board manufacturing requirements. By optimizing the equipment features and performance of its existing FPR 220 series, HOMAG has now launched a newcomer to the double-end tenoner family in the form of the FPR 260. With an outstanding cost-to-performance ratio, this new series is practically unrivalled as a machine for the manufacture of parquet flooring.

The HOMAG double-end tenoner family has a new member in its midst. The new double-end tenoner series FPR 260 **(Fig. 1)** is making a big impression with an array of optimized features. Precision, speed, stability and superb quality are just some of its many attributes.

No vibrations: To reduce operating vibrations which can detract from processing accuracy, HOMAG has increased the weight of the machine by more than 50%. The inside walls of the new series have grown to a thickness of 60 mm, an increase of 20 mm on previous models. Face end reinforcements with a width of 120 mm have also been attached to the inside walls **(Fig. 2)**. A mineral mix has been cast permanently into the machine frame which additionally dampens vibrations and so ensures a further improvement to processing quality as well as extending tool service life.

Stable infeed and inclined magazine lift movement: The machine frame has been extended from 1,450 mm to 2,100 mm to provide greater stability at the infeed. The transverse profiler FPR 266 has also benefitted

from an adjustment to the magazine. With a rear wall which lifts upwards automatically at an inclined angle **(Fig. 3)** now forming a standardized feature of the FPR 266 magazine, boards are effectively prevented from becoming wedged between the rear wall of the magazine and the transport chain. In previous models, the magazine rear wall only moved in the horizontal direction, making it more difficult to release wedged boards.

Enhanced quality with transport chain system: The new FPR 260 series can be equipped with different variants of the familiar high-precision HOMAG transport chain system. Using the standard transport chain, during longitudinal profiling it is only possible to process boards with a minimum width of 138 mm. For profiling narrower boards, offset chain plates are used, such as the “W2” version for board widths of 75 mm or “W1” **(Fig. 4)** for board widths of 57 mm. Double-end tenoners for parquet processing are fitted with high-precision chain plates to ensure superlative quality.

Precise chain guidance: Steel strips on the horizontal and vertical guide surfaces of the chain guide rail **(Fig. 5)** ensure almost wear-free and precise chain guidance. Special deflectors with polygon compensation at the infeed and outfeed additionally guarantee extremely smooth chain running.

Simple displacement of the top pressure beam: Alongside the transport chain system, the top pressure beam has also been optimized with improved setting facility for different profile depths. In previous models, integration of the necessary spacers was only possible by removing the complete beam. This has now been replaced by a simple, fast solution which entails displacing the top pressure beam manually along the guide, allowing the spacers to be inserted.

25 % speed increase: The Optimat FPR 220 double-end tenoners permit feed rates of up to 80 m/min. The new 260 series is capable of maximum speeds of up to 100 m/min.

Up to eight processing positions: The 220 series allows users up to six processing positions on each side of the machine. The new 260 series is available with both six and eight positions. Swivel fixtures fitted with spindle and work can be optionally integrated for the trimming motors **(Fig. 6)**.
Another newly developed feature is a servo-controlled unit designed specifically for trimming the tongues of the 5G-S transverse profile **(Fig. 7)**. This is an optional feature and can be used independently of the machine type.

Other features which have been optimized in the new series include an additional motor output of 11 kW, a 150 mm diameter extraction port for trimming units (120 mm in series 220) and ergonomically optimized machine panelling.
The FPR 260 series will provide customers with sound machines at an affordable price designed to provide enhanced processing quality for higher productivity.

Moving not mountains but boards

A particular highlight of the new FPR 260 series is the FPR 262 random length transverse profiler **(Fig. 8)**. In terms of its equipment features and output, this machine is based on the FPR 265/266 series and complies with the whole range of requirements for processing solid wood and multi-ply parquet. Unlike the other double-end tenoners, the FPR 262 processing machines are not positioned opposite each other but in staggered formation. Using a transfer station **(Fig. 9)**, the boards are transferred from the right-hand processing machine to the left-hand one,

allowing highly efficient and flexible transverse profiling of parquet boards with different lengths without loss of time due to resetting.
The compact mechanical design guarantees an exceptional level of precision in the production of all known profile types (tongue and groove, Click, 2G, 5G, 5G-S etc.). The machine is generally equipped with six processing positions per side, but can be effortlessly extended to eight positions, for example to allow the integration of supplementary units such as chamfer lacquering tongue application for 5G or 5G-S profiles. It is designed for boards with a length of 290 mm to 2,440 mm, a laying width of between 57 mm and 254 mm and a thickness of 6.5 mm to 25 mm. The processed boards can have untreated or lacquered surfaces.
The FPR 262 random length transverse profiler is a compact, highly economical solution for transverse profiling of parquet boards of different lengths in a single pass.

Pictures courtesy of HOMAG Holzbearbeitungssysteme GmbH

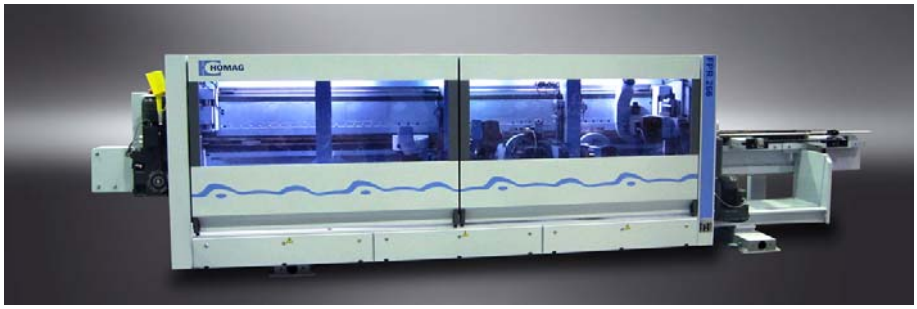

Fig. 1:

Double-end tenoner FPR 266 for transverse profiling

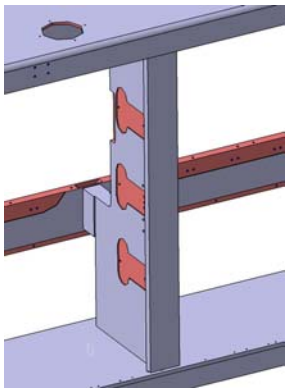

Fig. 2:

Reinforced machine frame for higher processing quality

Fig. 3:

Optimized magazine at the transverse machine infeed

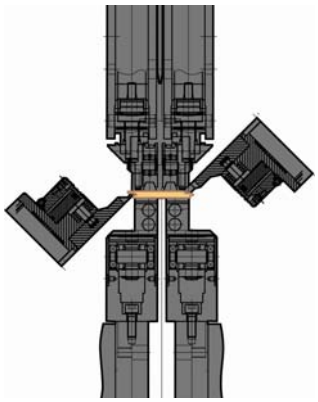

Fig. 4:

Offset chain W1 for profiling narrow components

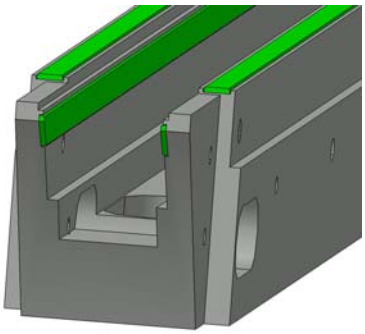

Fig. 5:

Steel strip at the horizontal and vertical guide surfaces of the chain guide rail

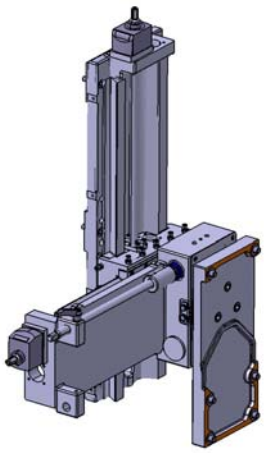

Fig. 6:

Swivel fixture with spindle and worm

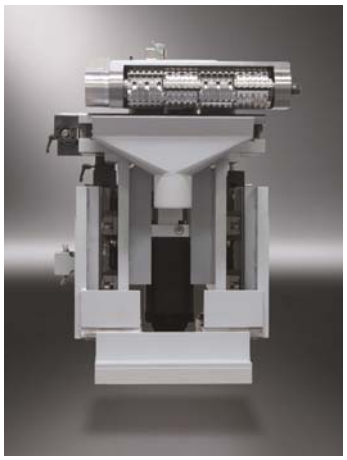

Fig. 7:

HOMAG 5G-S trimming unit

Fig. 8:

FPR 262 random length transverse profiler

Fig. 9:

Transfer station of the FPR 262

For more information, contact

HOMAG Holzbearbeitungssysteme GmbH
Homagstraße 3–5
72296 SCHOPFLOCH
GERMANY
www.homag.com

Alexander Prokisch
Head of Communication
Tel. +49 7443 13-3122
Fax +49 7443 13-8-3122
alexander.prokisch@homag.de

Authors:

Verena Dengler
Project Processing
HOMAG Group Engineering
Tel. +49 7443 13-2691
Fax +49 7443 13-8-2691
verena.dengler@homag.de

Andreas Lorenz
Project Manager
HOMAG Group Engineering
Tel. +49 7443 13-3244
Fax +49 7443 13-8-3244
andreas.lorenz@homag.de